novotechnik
Siedle Group

NOVOSTRICTIVE Transducer Touchless

TM1
Plug-in Flange
CAN SAE J1939
Mobile Applications

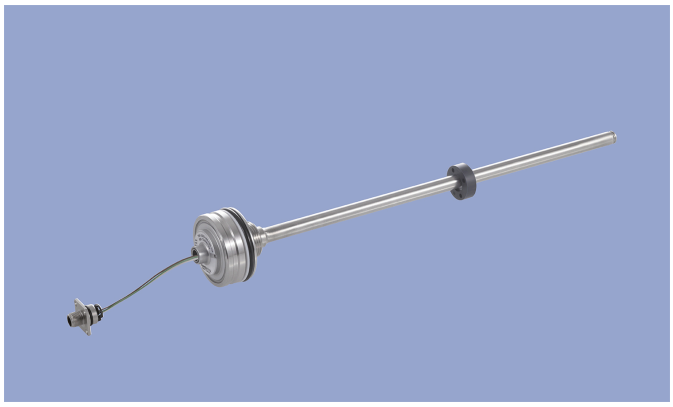

Special Features
- For integration in pneumatic and hydraulic cylinders
- Touchless magnetostrictive measurement technology
- Operating pressure up to 350 bar, peaks up to 450 bar
- Ring-shaped position marker does not contact sensor
- Unlimited mechanical life
- No velocity limit for position marker
- Absolute output
- Outstanding accuracy performance up to 0.04 %
- Wide range of supply voltage
- Optimized for use in mobile applications with highest EMC requirements such as ISO pulses and high interferences to ISO 11452, exceeds E1 requirements
- Other configurations see separate data sheets

Applications
Hydraulic or pneumatic cylinders in
- Agricultural and forestry machinery
- Construction machines
- Vehicles with loading and unloading devices
- Vehicles with extension arms

The absolute position transducer can be used directly in-cylinder and thus enables a compact and cost-effective position measurement. The sensor consists of a stainless steel flange welded to a pressure tight rod and can therefore be used in harsh environments.
The magnetostrictive measuring technology offers excellent accuracy for measuring lengths up to 2000 mm.
The passive ring-shaped position marker allows a mechanically decoupled measurement.

Description	
Material	Flange: stainless steel 1.4307 / AISI 304L Flange cover: AlSiMgBi Rod: stainless steel 1.4571 / AISI 316Ti Sealing: O-ring FKM 80, Supporting ring: PTFE
Mounting	Plugged into cylinders, secured in position with set screw M5 ISO 4026
Electrical connection	Connector M12x1, A-coded / Connector system M12x1, A-coded with lead wires

Mechanical Data	
Dimensions	See dimension drawing

Ordering Specifications

Ordering Specifications

Preferred types printed in bold

Interface
J: CAN SAE J1939

Interface parameters
1: 1x position, 1x speed

Baud rate
3: 500 kBaud
4: 250 kBaud

Electrical connection
106: Connector M12x1, 5-pin
468: Plug system M12x1, 5-pin, with lead wires 80 mm
472: Plug system M12x1, 5-pin, with lead wires 120 mm
476: Plug system M12x1, 5-pin, with lead wires 160 mm
480: Plug system M12x1, 5-pin, with lead wires 200 mm
484: Plug system M12x1, 5-pin, with lead wires 240 mm

T M 1 – 0 5 0 0 – 3 0 5 – J 1 4 – 4 7 2

Mechanical version
305: Plug-in flange Ø 48 mm
307: Plug-in flange Ø 48 mm with internal thread M4x6 at rod end, additional length 7.5 mm

Series

Electrical measuring range
Standard lengths 0050 up to 2000 mm in 25 mm-steps
Other lengths on request

Drawing

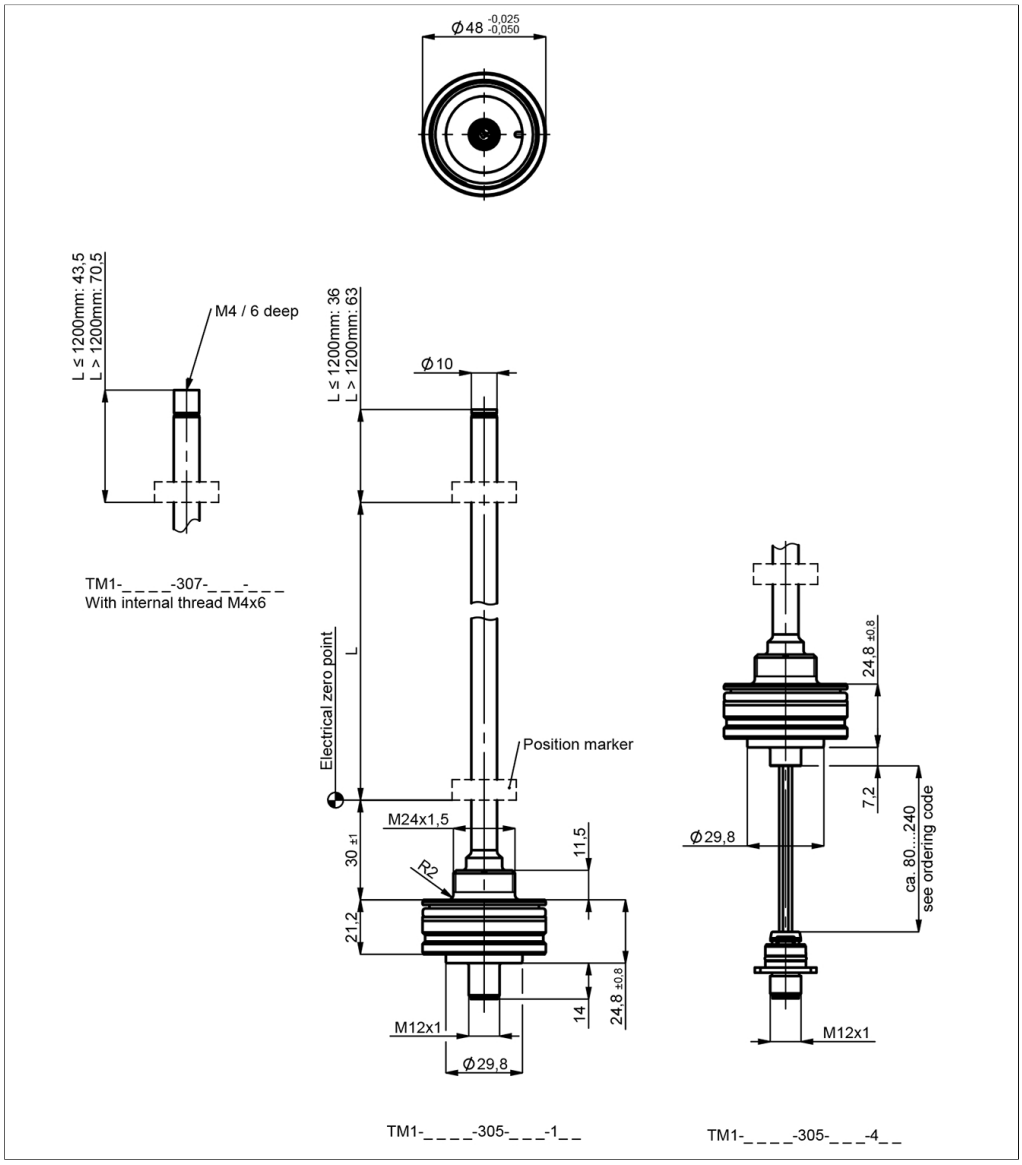

CAD data see
www.novotechnik.de/en/download/cad-data/

Technical Data

Type	**TM1-_ _ _ _-305-J_ _-_ _ _** **CAN SAE J1939**
Measured variables	Position, speed and temperature
Electrical measuring range (dim. L)	0 ... 50 mm up to 0 ... 2000 mm
Measuring range speed	25 ... 1000 mm/s
Protocol	CAN SAE J1939
Programmable parameters	Offset position, averaging, baud rate, transmit mode, transmit cycle, source address
Node ID	128 ... 247 (dynamic address claiming)
Baud rate	250, 500 kBaud
Update rate (output)	1 kHz (internal measuring rate 0.5 kHz)
Resolution position	≤ 0.1 mm
Resolution speed	2 mm/s
Absolute linearity	≤ ±0.04 %FS (min. 300 µm)
Tolerance of electr. zero point	±1 mm
Repeatability	≤ ±0.1 mm
Hysteresis	≤ ±0.1 mm
Temperature error	≤ ±15 ppm/K (min. 0.01 mm/K)
Supply voltage Ub	12/24 VDC (8 ... 34 VDC)
Supply voltage ripple	≤ 10% Ub
Power drain w/o load	< 1.5 W
Overvoltage protection	40 VDC (6 s)
Polarity protection	yes (supply lines and outputs)
Short circuit protection	yes (all outputs vs. GND and supply voltage)
Insulation resistance (500 VDC)	≥ 10 MΩ
Bus termination internal	w/o (internal load resistance 120 Ω on request)
Environmental Data	
Max. operational speed	Mechanically unlimited
Vibration IEC 60068-2-6	20 g, 10 ... 2000 Hz, Amax = 0.75 mm
Shock IEC 60068-2-27	100 g, 11 ms (single hit)
Protection class DIN EN 60529	IP67 (Connector system M12, fastened, when correctly fitted in cylinder: IP69)
Operating temperature	-40 ... +105°C, -40 ... +85°C (connector system M12)
Operating humidity	0 ... 95 % R.H. (no condensation)
Working pressure	≤ 350 bar
Pressure peaks	≤ 450 bar
Burst pressure	> 700 bar
Life	Mechanically unlimited
Functional safety	If you need assistance in using our products in safety-related systems, please contact us
MTTF (IEC 60050)	391 years
Traceability	Serial number on type labeling: production batch of the sensor assembly and relevant sensor components
EMC Compatibility	
ISO 10605 ESD (Handling/Component)	8 kV / 15 kV
ISO 11452-2 Radiated HF-fields	100 V/m
ISO 11452-4 BCI (Bulk current injection)	200 mA
CISPR 25 Radiated emission	Level 4
ISO 7637-2 Transient Emissions	Level 1/2
ISO 7637-2 Pulses on supply lines	(1, 2a, 2b, 3a, 3b) Level 4
ISO 7637-3 Pulses on output lines	(3a, 3b) Fast Level 2
ISO 16750 Pulses on supply lines	Starting profile Level 4 @12 V / Level 3 @24 V, Load dump A +200 V
EN 13309 Construction machinery	
ISO 14982 Agricult./forestry machines	
Emission/Immunity	Exceeds E1 requirements
	The EMC measurements are conducted in a reference cylinder. The EMC properties can deviate when using different cylinders.

FS = Full scale: Signal span according to electrical measuring range

Connection Assignment

Signal	Connector code 106	Plug system code 4_ _
Supply voltage Ub	Pin 2	Pin 2
GND	Pin 3	Pin 3
CAN_H	Pin 4	Pin 4
CAN_L	Pin 5	Pin 5
Not assigned	Pin 1	Pin 1

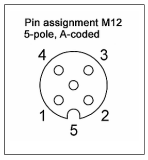

Position Markers

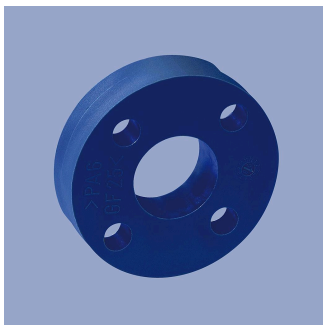

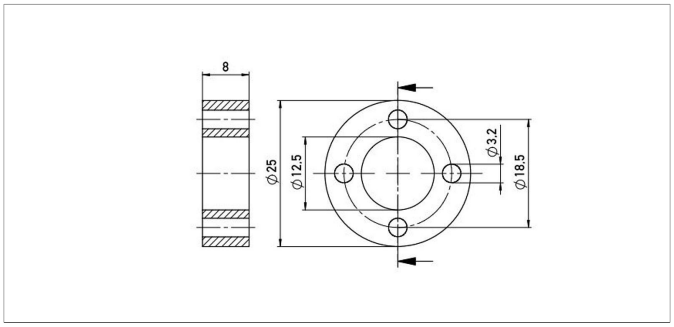

Z-TH1-P18

Ring position marker for fixation with screws M3

Material	PA6-GF
Weight	approx. 12 g
Operating temp.	-40 ... +100°C
Surface pressure	max. 40 N/mm²
Fastening torque of mounting	max. 100 Ncm

P/N	Pack. unit [pcs]
400005697	1

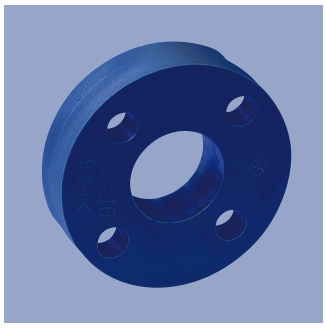

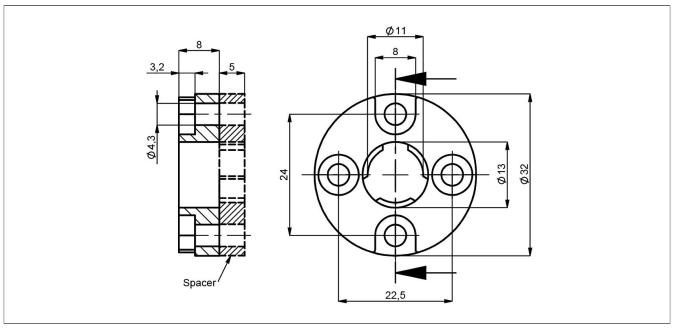

Z-TH1-P19

Z-TH1-PD19 With spacer

Ring position marker for fixation with screws M4, optionally with or without spacer

Material	PA6-GF, Spacer: POM-GF
Weight	approx. 14 g
Operating temp.	-40 ... +100°C
Surface pressure	max. 40 N/mm²
Fastening torque	max. 100 Ncm

P/N	Spacer	Pack. unit [pcs]
400005698	-	1
400107117	incl.	1

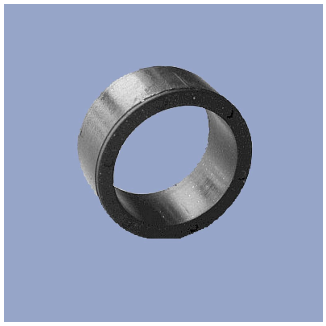

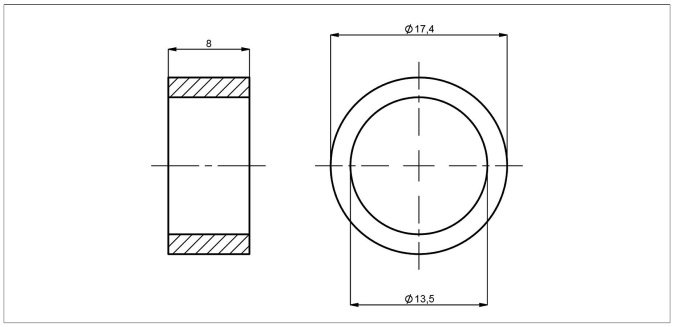

Z-TH1-P30

Ring position marker for mounting via lock washer and retaining ring

Material	NdFeB bonded (EP)
Weight	approx. 5 g
Operating temp.	-40 ... +100°C
Surface pressure	max. 10 N/mm²

P/N	Pack. unit [pcs]
400106139	1

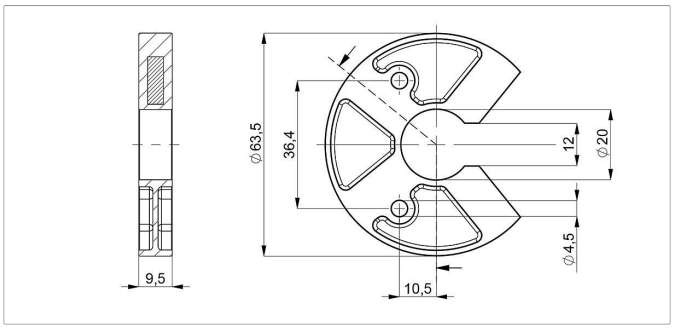

Z-TH1-P25

U-shaped position marker for fixation with M4 screws

Caution: for dimension of electrical zero point please follow the user manual!

Material	PA6-GF
Operating temp.	-40 ... +105°C
Surface pressure	max. 40 N/mm²
Fastening torque of mounting	max. 100 Ncm

P/N	Pack. unit [pcs]
400105076	1

Position Markers

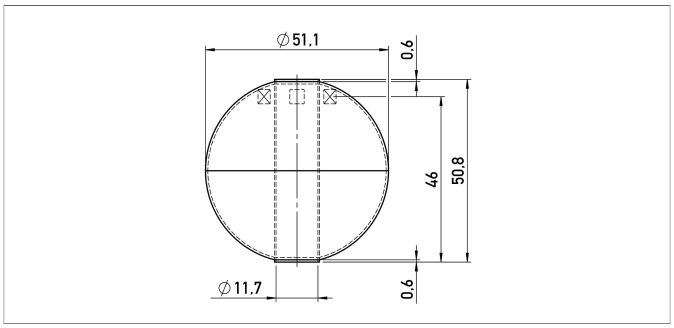

Z-TH1-P32
Ball-type floating position marker

Material	Stainless steel 1.4571
Weight	approx. 42 g
Operating temp.	-40 ... +100°C
Compression strength	≤ 40 bar
Density	720 kg/m³
Immersion depth in water	36.7 mm

P/N	Pack. unit [pcs]
400105703	1

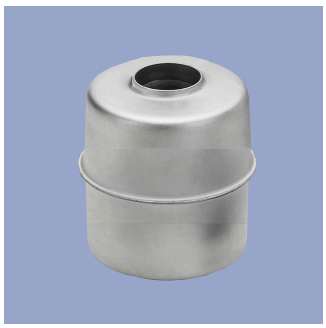

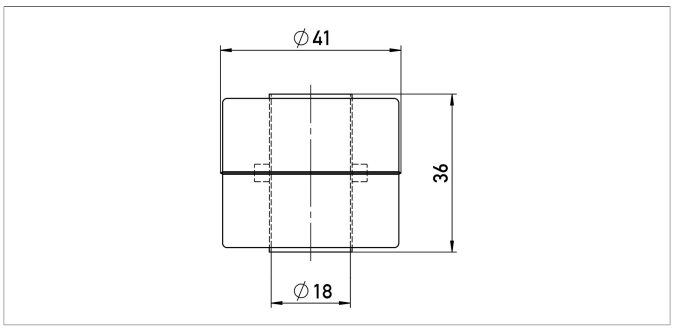

Z-TH1-P21
Cylinder floating position marker

Material	Stainless steel 1.4404
Weight	approx. 20 g
Operating temp.	-40 ... +100°C
Compression strength	≤ 8 bar
Density	740 kg/m³
Immersion depth in water	approx. 26.6 mm

P/N	Pack. unit [pcs]
400056044	1

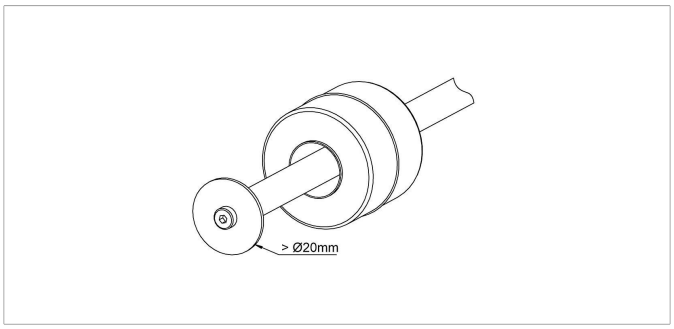

When using floating position markers, we recommend to secure the marker against loss with a washer at the rod end.
For this purpose, a sensor version with inner thread at the rod end is required (s. ordering code).

Connector System M12

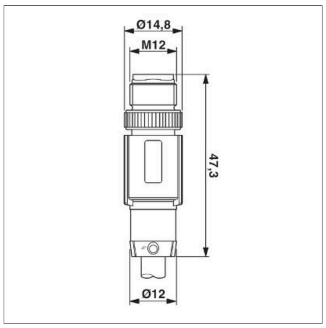

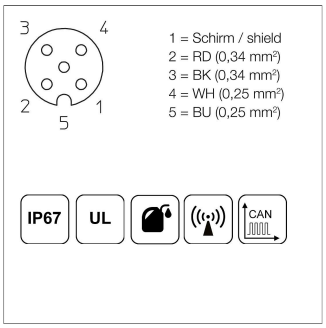

EEM-33-49/50/51
M12x1 Mating female connector, 5-pin, straight, A-coded, with molded cable, IP67, shielded (shield on knurl), open ended

Plug housing	TPU
Cable sheath	PUR, Ø = 6.7 mm, -25 ... +90°C (socket) -20 ... +80°C (cable)
Lead wires	PE, 2x0.25 mm²+2x0.34 mm²

P/N	Type	Length
400106368	EEM-33-49	2 m
400106371	EEM-33-50	5 m
400106372	EEM-33-51	10 m

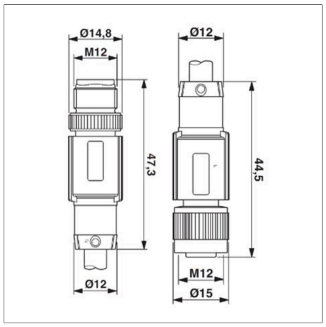

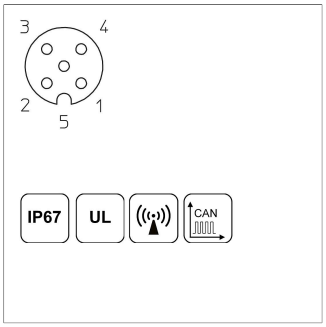

EEM-33-52
M12x1 Mating female/male connector, 5-pin, straight, A-coded, with molded cable, IP67, shielded (shield on knurl), CAN-Bus

Plug housing	PUR
Cable sheath	PUR, Ø = 6.7 mm, -25 ... +90°C (plug/socket) -20 ... +80°C (cable)
Lead wires	PE, 2x0.25 mm²+2x0.34 mm²

P/N	Type	Length
400106373	EEM-33-52	5 m

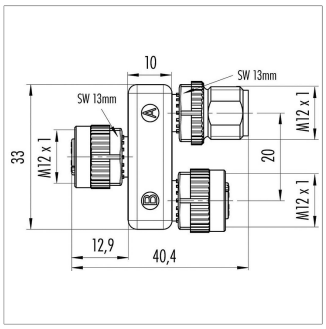

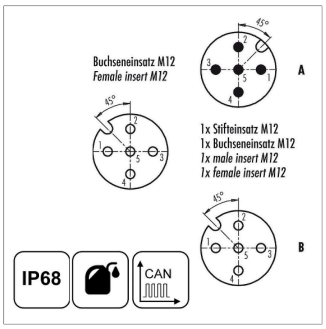

EEM-33-45
M12x1 splitter / T-connector, 5-pin, A-coded, IP68,1:1 connection, female - male - female, CAN-Bus

Plug housing	PUR, -25 ... +85°C

P/N	Type
400056145	EEM-33-45

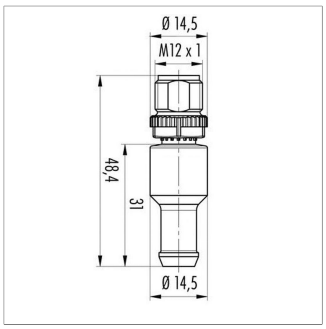

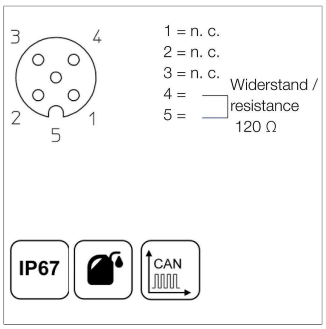

EEM-33-47
M12x1 terminating resistor, 5-pin, A-coded, IP67, 120 Ω resistance, CAN-Bus

Plug housing	PUR, -25 ... +85°C

P/N	Type
400056147	EEM-33-47

IP67 Protection class IP67 DIN EN 60529

IP68 Protection class IP68 DIN EN 60529

Very good Electromagnetic Compatibiliy (EMC) and shield systems

Very good resistance to oils, coolants and lubricants

Suited for applications in dragchains

UL - approved

CAN CAN-Bus

novotechnik
Siedle Group

Novotechnik
Messwertaufnehmer OHG
P.O.Box 4220
73745 Ostfildern (Germany)
Horbstrasse 12
73760 Ostfildern (Germany)
Phone +49 711 4489-0
Fax +49 711 4489-118
info@novotechnik.de
www.novotechnik.de

© Feb 20, 2025

The specifications contained in our datasheets are intended solely for informational purposes. The documented specification values are based on ideal operational and environmental conditions and can vary significantly depending on the actual customer application. Using our products at or close to one or more of the specified performance ranges can lead to limitations regarding other performance parameters. It is therefore necessary that the end user verifies relevant performance parameters in the intended application. We reserve the right to change product specifications without notice.