novotechnik
Siedle Group

NOVOSTRICTIVE Transducer up to 4250 mm touchless

Series TH1

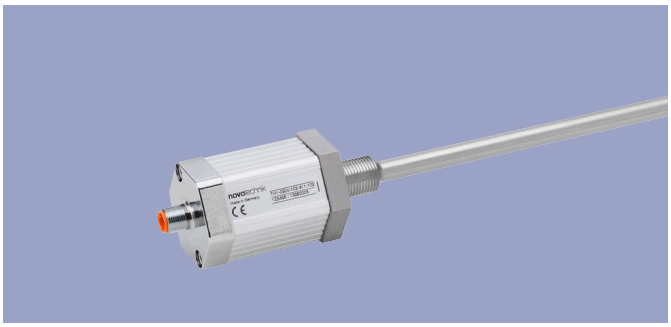

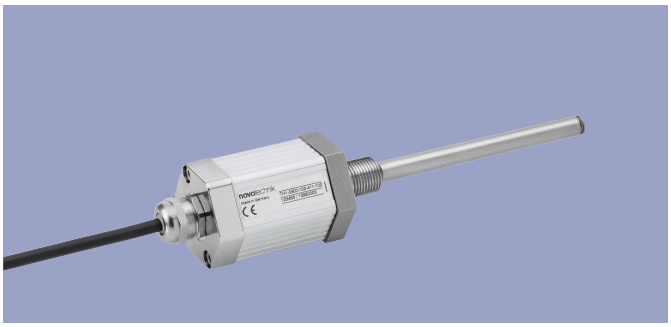

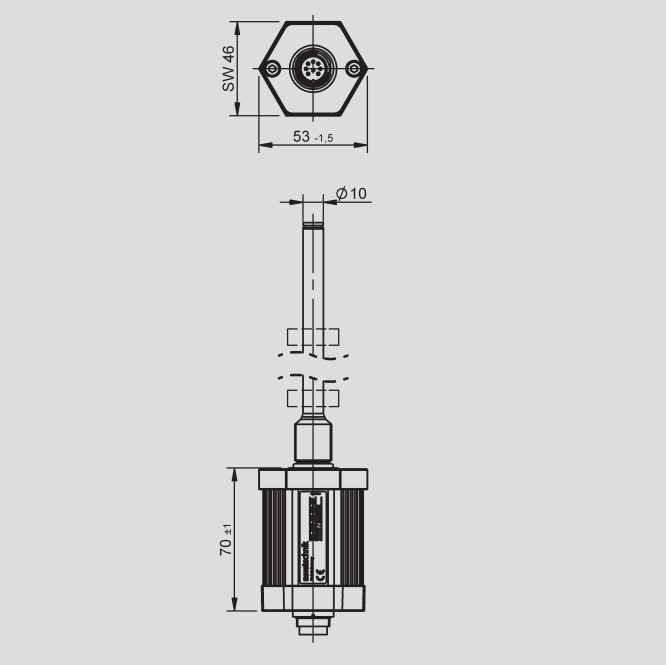

Special features

- Touchless magnetostrictive measurement technology
- Rod style transducer, integratable
- Non-contacting position detection with ring shaped position marker
- Unlimited mechanical life
- Resolution up to 1 µm, independently of length
- Low temperature coefficient <15 ppm/K
- Position-Teach-In
- Insensitive to shock and vibration
- Operating pressure up to 350 bar
- Protection class IP67 / IP68
- Interfaces: Analog, SSI, Impulse, CANopen, IO-Link

Applications

- Fluid Power
  Pneumatic- or Hydraulic Cylinder
- Manufacturing Engineering
- Mobile Machinery

High precision transducer with touchless magnetostrictive technology for mechanically decoupled and therefore wear-free position measurement for lengths up to 4250 mm.
The integrable and pressure-resistant rod design with passive ring position markers allow the use inside of hydraulic cylinders. Here, the pressure area is sealed by an O-ring on the flange.

Depending on the interface, up to three positions and speed can be measured.

Contents

Mechanical Data	3
Analog Versions	
Technical Data	4
Ordering Specifications	5
Digital Versions	
SSI	6
Impulse	7
Ordering Specifications	8
Fieldbus, IO-Link Versions	
CANopen	9
IO-Link	10
Ordering Specifications	11
Accessories	
Position marker	12
Fastening elements	13
M12 Connector System	14
M16 Connector System	17

Mechanical Data

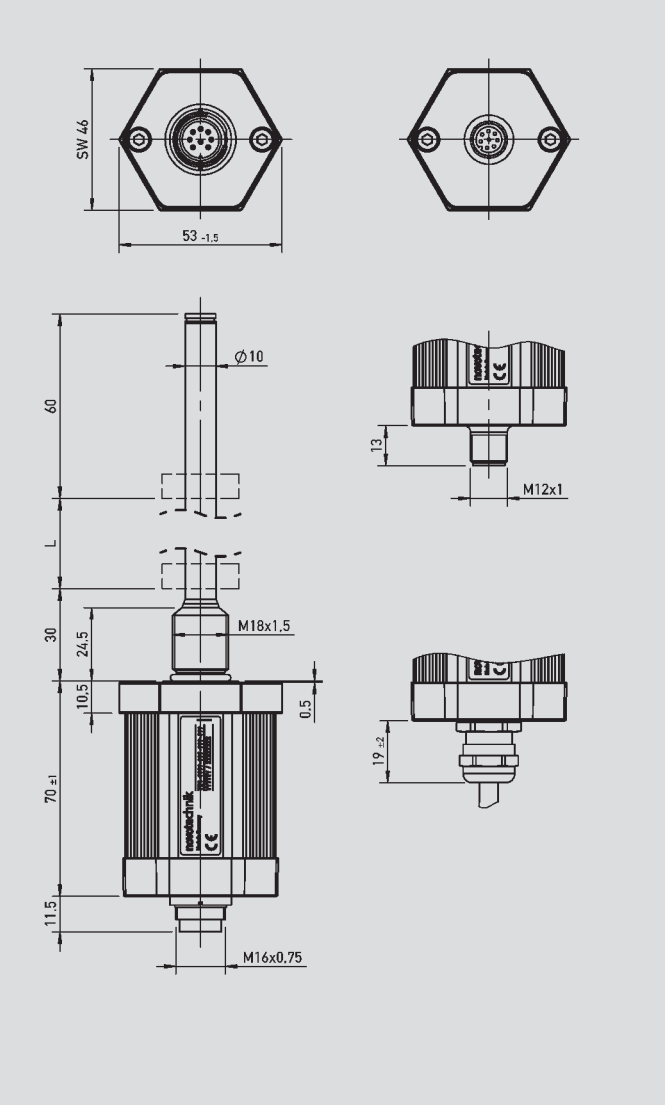

Description		
Materials	Housing: Anodized aluminum, AlMgSi0,5 F22, 3.3206.71 Screw flange: stainless steel X2CrNiMoN 18-14-3, 1.3952 Rod: stainless steel X6CrNiMoTi 17-12-2, 1.4571	
Mounting	Bushing M18x1,.5 for screw plug hole per ISO6149 Bushing 3/4"-16UNF for screw plug hole per SAE J475	
Position marker	Ring shaped position marker	
Messverfahren	NOVOSTRICTIVE, touchless magnetostrictive	
Electr. connections	Connector M12x1, 4-pol., 5-pol. / 8-pin., shielded Connector M16x0.75 (IEC 130-9), 6-pin. / 8-pon., shielded PUR-cable, 8x0.25 mm^2, shielded; 1 m, 3 m oder 5 m length	
Electronic	SMD with ASIC, integrated Connector casing (shield) is connected to the sensor housing. Housing is capacitively decoupled to the electronics	

Mechanical Data		
Dimensions	see dimension drawing	
Electrical measuring range (Dimension L)	0050 up to 4250 mm in 25 mm steps other lengths on request	
Max. operational speed with valid ouput signal	10	ms^{-1}
Max. operational acceleration with valid ouput signal	200	ms^{-2}
Shock (IEC 60068-2-27)	100 (11 ms) (single hit)	g
Vibration (IEC 60068-2-6)	20 (5...2000 Hz, Amax = 0.75 mm)	g
Protection class (DIN EN 60529)	IP67 with fastened connector IP68 with cable connection	
Life	Mechanically unlimited	
Operating temperature range	-40 ... +85	°C
Storage temperature range	-40 ... +100	°C
Operating humidity range	0 ... 95 (no condensation)	% R.H.
Pressure rating Operating pressure Pressure peaks Burst pressure	 ≤ 350 ≤ 600 > 700	 bar bar bar

CAD data see
www.novotechnik.de/en/download/cad-data/

Technical Data
Analog Versions

Type designations	TH1- _ _ _ _- _ _ _ - 41 _ - _ _ _ Voltage	TH1- _ _ _ _- _ _ _ - 42 _ - _ _ _ Current	
Electrical Data			
Electrical measuring range (dimension L)	0050 up to 4250		mm
Output signal	0.1 ... 10 V (load ≥ 5 kΩ)	0.1 ... 20 mA (burden ≤ 500 Ω) 4 ... 20 mA (burden ≤ 500 Ω)	
Number of channels	2	1	
Sampling rate / Update rate	< 750 mm: 2kHz, 750 ... < 2000 mm: 1 kHz, > 2000 mm: 05 kHz Extrapoliated to 16 kHz		
Resolution	16		Bit
Absolute linearity *	≤ ± 0.02 (min. ± 50 µm)		% FS
Tolerance of electr. zero point	± 0.5 (min. 2 x reproducibility)		mm
Reproducibility	≤ 0.03		% FS
Hysteresis	≤ 0.01		% FS
Temperature error	≤ 30 (min. 0,01 mm/K)		ppm/K
Supply voltage	24 (19 ... 30)		VDC
Supply voltage ripple	≤ 10		% Ub
Current consumption	≤ 100		mA
Overvoltage protection	40 (temporary / 1 min.)		VDC
Polarity protection	Yes, up to supply voltage max.		VDC
Short circuit protection	Yes (outputs vs. GND and supply voltage max.)		
Insulation resistance (500 VDC)	≥ 10		MΩ
Environmental Data			
MTTF (DIN EN ISO 13849-1 parts count method, w/o load, wc)	28		Years
Functional safety	If you need assistance in using our products in safety-related systems, please contac us		
EMC compatibility CE	EN 61000-4-2 Electrostatic discharges (ESD) 4 kV, 8 kV EN 61000-4-3 Electromagnetic fields 10 V/m EN 61000-4-4 Electrical fast transients (burst) 2 kV EN 61000-4-6 Conducted disturbances, induced by RF-fields 10 V eff. EN 55011 Radiated disturbances class B		

*) Valid for channel 1; channel 2 with additional offset and gradient tolerances (inverted signal from channel 1).
Measured with position marker Z-TH1-P18 or Z-TH1-P19.

Pin assignment

Connector code 101, 102	Cable code 20_	Connector with cable (Accessories)	Analog voltage	Analog current
Pin 1	YE	WH	do not connect	0(4)...20 mA
Pin 2	GY	BN	Signal GND	Signal GND
Pin 3	PK	GN	+10...0 V	do not connect
Pin 4	RD	YE	DIAG *	DIAG *
Pin 5	GN	GY	0...+10 V	do not connect
Pin 6	BU	PK	GND	GND
Pin 7	BN	BU	Supply voltage	Supply voltage
Pin 8	WH	RD	PROG *	PROG *

*) Connect only for Teach-In-function (see manual).

Connector code 103	Connector with cable (Accessories)	Analog Voltage	Analog Current
Pin 1	WH	0 ...+10 V	0 (4)...20 mA
Pin 2	BN	Signal GND	Signal GND
Pin 3	BU	+10...0 V	do not connect
Pin 4	BK	GND	GND
Pin 5	GY	Supply voltage	Supply voltage
Pin 6	GN	GND	GND

Ordering Specifications Analog Versions - Voltage - Current

Ordering Specifications

Preferred types printed in bold

Electrical interfaces
4: Analog Interfaces

Output signal analog interfaces 4 _ _
1: Voltage output
2: Current output

Analog interface voltage output 41_
1: 0 ... 10 V and 10 ... 0 V

Analog interface current output 42_
1: 0 ... 20 mA
2: 20 ... 0 mA
3: 4 ... 20 mA
4: 20 ... 4 mA

Electrical connection
101: Connector M16x0.75 (IEC 130-9), 8-pin
102: Connector M12x1, 8-pin
103: Connector M16x0.75 (IEC 130-9), 6-pin
201: Cable, 8-pol., shielded, 1 m
203: Cable, 8-pol., shielded, 3 m
205: Cable, 8-pol., shielded, 5 m
Other cable lengths and assembled connectors on request

T H 1 – 0 8 0 0 – 1 0 2 – 4 1 1 – 1 0 2

Series

Electrical measuring range
Standard lengths
0050 up to 4250 mm
in 25 mm-steps.
Other lengths on request

Mechanical version
102: Screw flange M18x1.5, zero point at 30 mm
103: Screw flange 3/4“ - 16UNF, zero point at 30 mm
104: Screw flange M18x1.5, zero point at 51 mm
105: Screw flange 3/4“ - 16UNF, zero point at 51 mm
106: Screw flange M18x1.5, zero point at 30 mm, for supporting at rod end *
107: Screw flange 3/4“ - 16UNF, zero point at 30 mm, for supporting at rod end *
108: Screw flange M18x1.5, zero point at 51 mm, for supporting at rod end *
109: Screw flange 3/4“ - 16UNF, zero point at 51 mm, for supporting at rod end *
Other mechanical versions on request

*) with internal thread M4x6 at rod end and additional length 7.5 mm

Important: Avoid equalizing currents in the cable shield caused by potential differences.

Technical Data
SSI-Interface

Type designations	TH1 - _ _ _ _ - _ _ _ - 2_ _ - _ _ _ Synchron-Serial-Interface (SSI)	
Electrical Data		
Electrical measuring range (dimension L)	0050 up to 4250	mm
Protocol	SSI 24 and 25 bit (26 bit on request)	
Inputs	RS422	
Monoflop time (tm)	30	µs
Encoding	Gray, Binary	
Sampling rate / Update rate	< 750 mm: 2 kHz, 750 ... < 2000 mm: 1 kHz, > 2000 mm: 0.5 kHz Extrapolated to 16 kHz	kHz
Resolution (LSB)	1, 5 or 10 (other resolutions on request)	µm
Absolute linearity *	< 250 mm ≤ ±25 µm < 750 mm ≤ ±30 µm < 1000 mm ≤ ±50 µm < 2500 mm ≤ ±80 µm up to 4250 mm ≤ ±120 µm	
Tolerance of electr. zero point	± 0.5	mm
Reproducibility (rounded to LSB)	≤ 6	µm
Hysteresis (rounded to LSB)	≤ 4	µm
Temperature error	≤ 15 (min. 0.01 mm/K)	ppm/K
Supply voltage	24 (13 ... 34)	VDC
Supply voltage ripple	≤ 10	% Ub
Overvoltage protection	40 (permanent)	VDC
Current consumption	≤ 100	mA
Polarity protection	Yes, up to supply voltage max.	
Short circuit protection	Yes (outputs vs. GND and supply voltage up to 7 V)	
Ohmic load at outputs	> 120	Ω
Max. Clock rate	2	MHz
Insulation resistance (500 VDC)	≥ 10	MΩ
Environmental Data		
MTTF (DIN EN ISO 13849-1, parts count method, w/o load, wc)	32	Years
Functional safety	If you need assistance in using our products in safety-related systems, please contac us	
CE npatibility	EN 61000-4-2 Electrostatic discharges (ESD) 4 kV, 8 kV EN 61000-4-3 Electromagnetic fields 10 V/m EN 61000-4-4 Electrical fast transients (burst) 1 kV EN 61000-4-6 Conducted disturbances, induced by RF-fields 10 V eff. EN 61000-4-8 Magnetfelder mit energietechnischen Frequenzen 3 A/m EN 55011 Radiated disturbances class B	

*) Measured with resolution 1 µm.
At resolution > 1 µm the permissible linearity error is increased by the resolution.

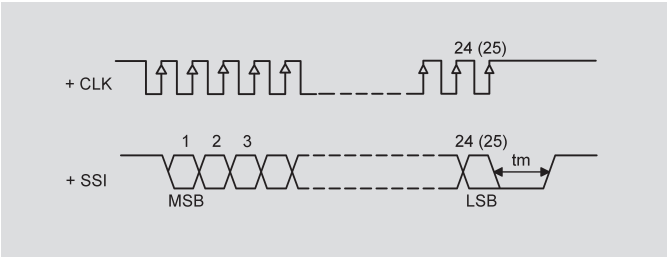

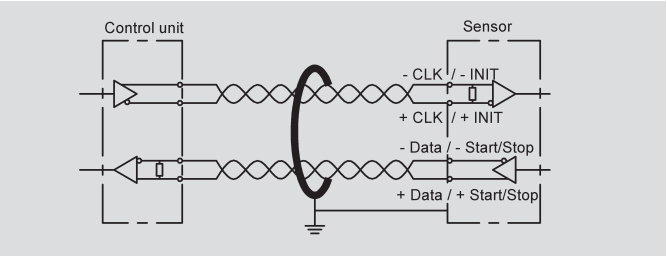

Pin assignment

Connector code 101, 102	Cable code 20 _	Connector with cable (Accessories)	SSI Interface
Pin 1	YE	WH	Clk +
Pin 2	GY	BN	Data +
Pin 3	PK	GN	Clk -
Pin 4	RD	YE	do not connect
Pin 5	GN	GY	Data -
Pin 6	BU	PK	GND
Pin 7	BN	BU	Supply voltage
Pin 8	WH	RD	do not connect

Connector code 103	Connector with cable (Accessories)	Connector code 108	SSI Interface
Pin 1	WH	Pin 1	Data -
Pin 2	BN	Pin 2	Data +
Pin 3	BU	Pin 3	Clk +
Pin 4	BK	Pin 4	Clk -
Pin 5	GY	Pin 5	Supply voltage
Pin 6	GN	Pin 6	GND
-	-	Pin 7	do not connect

Technical Data
Impulse-Interface

Type designations	TH1- _ _ _ _ - _ _ _ - 11 _ - _ _ _ Start-Stop-Impulse-Interface	
Electrical Data		
Electrical measuring range (dimension L)	0050 up to 4250	mm
Number of position markers	1 up to 3	
Protocol	Impulse	
Inputs	RS422	
Sampling rate / Update rate	< 500 mm: 1 kHz, 500 ... < 2000 mm: 0.5 kHz, > 2000 mm: 0.25 kHz	kHz
Resolution	Depending on interpretation, normalized to 2800 ms^{-1}	
Absolute linearity	< 1000 mm ≤ ±50 µm < 2500 mm ≤ ±80 µm up to 4250 mm ≤ ±120 µm	µm
Tolerance of electr. zero point	± 0.5	mm
Reproducibility	≤ 6	µm
Hysteresis	≤ 4	µm
Temperature error	≤ 15 (min. 0,01 mm/K)	ppm/K
Supply voltage	24 (13 ... 34)	VDC
Supply voltage ripple	≤ 10	% Ub
Overvoltage protection	40 (permanent)	VDC
Current consumption	≤ 100	mA
Polarity protection	Yes, up to supply voltage max.	
Short circuit protection	Yes (outputs vs. GND and supply voltage up to 7 V)	
Insulation resistance (500 VDC)	≥ 10	MΩ
Environmental Data		
MTTF (DIN EN ISO 13849-1, parts count method, w/o load, wc)	27	Years
Functional safety	If you need assistance in using our products in safety-related systems, please contac us	
EMC compatibility CE	EN 61000-4-2 Electrostatic discharges (ESD) 4 kV, 8 kV EN 61000-4-3 Electromagnetic fields 10 V/m EN 61000-4-4 Electrical fast transients (burst) 2 kV EN 61000-4-6 Conducted disturbances, induced by RF-fields 10 V eff. EN 55011 Radiated disturbances class B	

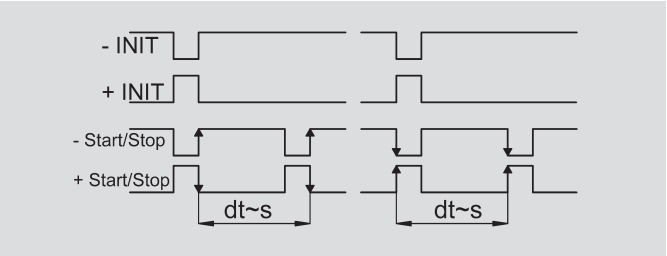

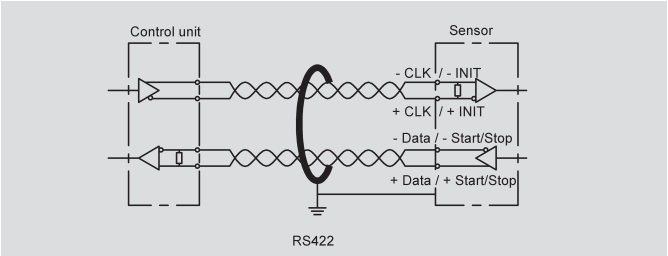

Pin assignment

Connector code 101, 102	Cable code 20 _	Connector with cable (Accessories)	Start/Stop-Impulse Interface
PIN 1	YE	WH	INIT +
PIN 2	GY	BN	Start/Stop +
PIN 3	PK	GN	INIT -
PIN 4	RD	YE	do not connect
PIN 5	GN	GY	Start/Stop -
PIN 6	BU	PK	GND
PIN 7	BN	BU	Supply voltage
PIN 8	WH	RD	do not connect

Connector code 103	Connector with cable (Accessories)	Start/Stop-Impulse Interface
Pin 1	WH	Start/Stop -
Pin 2	BN	Start/Stop +
Pin 3	BU	INIT +
Pin 4	BK	INIT -
Pin 5	GY	Supply voltage
Pin 6	GN	GND

Ordering Specifications Digital Versions - SSI - Start-Stop-Impulse

Ordering Specifications

Preferred types printed in bold

Electrical Interfaces
1: Impulse Interface
2: SSI Interface

Output Signal Impulse Interface 1 _ _
1: Impulse-Interface Start Stop Signal

Output Signal SSI Interface 2 _ _
1: SSI 24 bit
2: SSI 25 bit
7: SSI 26 bit (25 = alarm, 26 = parity even) on request

Impulse-Interface Start Stop Signal 11_
1: For 1 position marker
2: For 2 position markers
3: For 3 position markers

SSI-Interface 2 _ _
1: Binary code; resolution 5 µm
2: Gray code; resolution 5 µm
4: Binary code; resolution 1 µm
5: Gray code; resolution 1 µm
7: Binary code; resolution 10 µm
8: Gray code; resolution 10 µm

Electrical connection
101: Connector M16x0,75 (IEC 130-9), 8-pin
102: Connector M12x1, 8-pin
103: Connector M16x0.75 (IEC 130-9), 6-pin
108: Connector M16x0.75 (IEC 130-9), 7-pin (only SSI-Interface)
201: Cable, 8-pol., shielded, 1 m
203: Cable, 8-pol., shielded, 3 m
205: Cable, 8-pol., shielded, 5 m
Other cable lengths and assembled connectors on request

T H 1 – 0 8 0 0 – 1 0 2 – 2 1 1 – 1 0 2

Series

Electrical measuring range
Standard lengths
0050 up to 4250 mm
in 25 mm-steps.
Other lengths on request

Mechanical version
102: Screw flange M18x1.5, zero point at 30 mm
103: Screw flange 3/4“ - 16UNF, zero point at 30 mm
104: Screw flange M18x1.5, zero point at 51 mm
105: Screw flange 3/4“ - 16UNF, zero point at 51 mm
106: Screw flange M18x1.5, zero point at 30 mm, for supporting at rod end *
107: Screw flange 3/4“ - 16UNF, zero point at 30 mm, for supporting at rod end *
108: Screw flange M18x1.5, zero point at 51 mm, for supporting at rod end *
109: Screw flange 3/4“ - 16UNF, zero point at 51 mm, for supporting at rod end *
Other mechanical versions on request

*) with internal thread M4x6 at rod end and additional length 7.5 mm

Important: Avoid equalizing currents in the cable shield caused by potential differences.
Twisted pair cable (STP) is recommended.

Technical Data

CANopen®

Type designations	TH1 - _ _ _ _ - _ _ _ - 6 _ _ - _ _ _ CANopen-Interface		
Electrical Data			
Measured variables	Position and speed		
Electrical measuring range (dimension L)	0050 up to 4250		mm
Measuring range speed	0 ... 10		ms^{-1}
Number of position markers	1 / 2		
Output signal / Protocol	CANopen protocol to CiA DS-301 V4.2.0, Device profile DS-406 V3.2 Encoder class C2, LSS services to CiA DS-305 V1.1.2		
Programmable parameters	Position, speed, cams, working areas, temperature, node-ID, baud rate		
Node-ID	1 ... 127 (default 127)		
Baudrate	20 ... 1000		kBaud
Resolution Position Speed	 1 0.1	 5 0.5	 µm mms^{-1}
Update rate	1 (internal sampling rate < 750 mm: 2 kHz, 750 ... < 2000 mm: 1 kHz, > 2000 mm: 0.5 kHz)		kHz
Absolute linearity *	< 250 mm ≤ ±25 µm < 750 mm ≤ ±30 µm < 1000 mm ≤ ±50 µm < 2500 mm ≤ ±80 µm up to 4250 mm ≤ ±120 µm		
Tolerance of electr. zero point	0.5		±mm
Reproducibility (rounded to resolution)	≤ 6		µm
Hysteresis (rounded to resolution)	≤ 4		µm
Temperature error	≤ 15 (min. 0.01 mm/K)		ppm/K
Supply voltage	24 (13 ... 34)		VDC
Supply voltage ripple	≤ 10		% Ub
Current consumption	≤ 100		mA
Overvoltage protection	40 (permanent)		VDC
Polarity protection	Yes, up to supply voltage max.		
Short circuit protection	Yes (outputs vs. GND und supply voltage max.)		
Insulation resistance (500 VDC)	≥ 10		MΩ
Bus termination internal	no		
Environmental Data			
MTTF (DIN EN ISO 13849-1 parts count method, w/o load, wc)	25		Years
Functional safety	If you need assistance in using our products in safety-related systems, please contact us		
EMC compatibility CE	EN 61000-4-2 Electrostatic discharges (ESD) 4 kV, 8 kV EN 61000-4-3 Electromagnetic fields 10 V/m EN 61000-4-4 Electrical fast transients (burst) 1 kV EN 61000-4-6 Conducted disturbances, induced by RF-fields 10 V eff. EN 55016-2-3 Noise radiation class B		

*) Measured with resolution 1 µm.
At resolution > 1 µm the permissible linearity error is increased by the resolution.

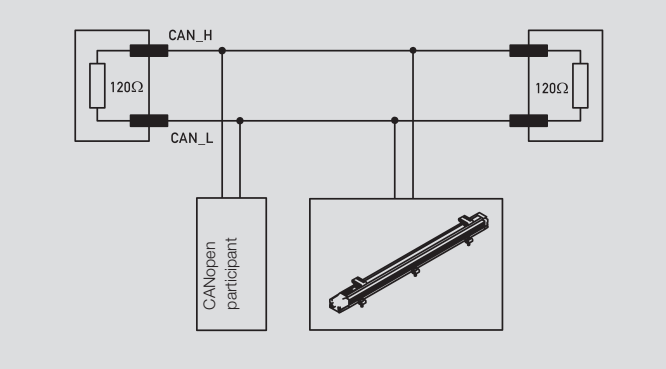

Pin assignment

Connector code 106	Connector code 105	CANopen Interface
Pin 1	Pin 3	CAN_SHLD ***
Pin 2	Pin 5	Supply voltage
Pin 3	Pin 6	GND
Pin 4	Pin 2	CAN_H
Pin 5	Pin 1	CAN_L
-	Pin 4	n/a

***) CAN_SHLD: CAN-shield, internally connected to housing

Technical Data
IO-Link

Type designations	TH1 - _ _ _ _ - _ _ _ - A _ _ - _ _ _ IO-Link		
Electrical Data			
Measured variables	Position, speed and temperature		
Electrical measuring range (dimension L)	0050 up to 4250		mm
Number of position markers	1 up to 3		
Output signal / protocol	IO-Link Spec V1.1 to IEC 61131-9, Smart Sensor Profil (V1.0 compatible)		
Programmable parameters	Zero point offset, resolution, averaging		
Configurability	Number of position markers and measured variables (position, speed). All product versions listed in the ordering specifications (e.g. 1 x position) are also configurable by the customer (e.g. into 2 x position and 2 x speed)		
Transfer rate	COM 3 (230.4 kB)		
Frame type	2.2		
Minimum cycle time	1		ms
Update rate	1 (internal sampling rate < 750 mm: 2 kHz, 750 ... < 2000 mm: 1 kHz, > 2000 mm: 0,.5 kHz)		kHz
Resolution			
Position	1	5	µm
Speed	0.1	0.5	mms^{-1}
Reproducibility (rounded to resolution)	≤ 6		µm
Hysteresis (rounded to resolution)	≤ 4		µm
Absolute linearity *	< 250 mm ≤ ±25 µm < 750 mm ≤ ±30 µm < 1000 mm ≤ ±50 µm < 2500 mm ≤ ±80 µm up to 4250 mm ≤ ±120 µm		
Zero point tolerance	0.5		±mm
Temperature error	≤ 15 (min. 0,01 mm/K)		±ppm/K
Supply voltage	24 (18 ... 30)		VDC
Supply voltage ripple	max. 10		% Ub
Current consumption (w/o load)	≤ 100		mA
Reverse voltage	yes, up to supply voltage max.		
Short circuit protection	yes (C/Q vs. GND and supply voltage)		
Overvoltage protection	36 (permanent)		VDC
Insulation resistance (500 VDC)	≥ 10		MΩ
Environmental Data			
MTTF (DIN EN ISO 13849-1 parts count method, w/o load, wc)	> 28.6		Years
Functional safety	If you need assistance in using our products in safety-related systems, please contact us		
EMC compatibility CE	EN 61000-4-2 Electrostatic discharges (ESD) 4 kV, 8 kV EN 61000-4-3 Electromagnetic fields 10 V/m EN 61000-4-4 Electrical fast transients (burst) 1 kV EN 61000-4-6 Conducted disturbances, induced by RF-fields 10 V eff. EN 55016-2-3 Noise radiation class B		

*) Measured with resolution 1 µm.
At resolution > 1 µm the permissible linearity error is increased by the resolution.

Pin assignment

Connector M12 Code 107	Connector with cable (accessories)	IO-Link
PIN 1	BN	Supply voltage (L+)
PIN 2	WH	do not connect *
PIN 3	BU	GND (L-)
PIN 4	BK	C/Q

*) alternatively on GND

Ordering Specifications

CANopen
IO-Link

Ordering Specifications

Preferred types printed in bold

Electrical interface
6: CANopen-Interface
A: IO-Link

Interface parameters for CANopen 6 _ _
1: Resolution 5 µm, 1 x position and speed, 1 position marker fix
3: Resolution 1 µm, 1 x position and speed, 1 position marker fix
5: Resolution 5 µm, 2 x position and speed, 2 position markers fix
6: Resolution 1 µm, 2 x position and speed, 2 position markers fix

Interface parameters for IO-Link A _ _
11: Resolution 5 µm, 1 x position, 1 position marker fix
12: Resolution 5 µm, 1 x position and speed, 1 position marker fix
13: Resolution 5 µm, 2 x position, 2 position markers fix
14: Resolution 5 µm, 2 x position and speed,2 position markers fix
15: Resolution 5 µm, 3 x position, 3 position markers fix

31: Resolution 1 µm, 1 x position, 1 position marker fix
32: Resolution 1 µm, 1 x position and speed, 1 position marker fix
33: Resolution 1 µm, 2 x position, 2 position markers fix
34: Resolution 1 µm, 2 x position and speed, 2 position markers fix
35: Resolution 1 µm, 3 x position, 3 position markers fix

Baud rate CANopen 6 _ _
1: Baud rate 1000 kBaud
2: Baud rate 800 kBaud
3: Baud rate 500 kBaud
4: Baud rate 250 kBaud
5: Baud rate 125 kBaud
7: Baud rate 50 kBaud
8: Baud rate 20 kBaud

Electrical connection CANopen
105: Connector M16x0.75 (IEC130-9), 6-pin
106: Connector M12x1, 5-pin

Electrical connection IO-Link
107: Connector M12x1, 4-pin

T H 1 – 0 8 0 0 – 1 0 2 – 6 1 3 – 1 0 6

Series

Electrical measuring range
Standard lengths
0050 up to 4250 mm
in 25 mm-steps.
Other lengths on request

Mechanical version
102: Screw flange M18x1.5, zero point at 30 mm
103: Screw flange 3/4“ - 16UNF, zero point at 30 mm
104: Screw flange M18x1.5, zero point at 51 mm
105: Screw flange 3/4“ - 16UNF, zero point at 51 mm
106: Screw flange M18x1.5, zero point at 30 mm, for supporting at rod end *
107: Screw flange 3/4“ - 16UNF, zero point at 30 mm, for supporting at rod end *
108: Screw flange M18x1.5, Zero point at 51 mm, for supporting at rod end *
109: Screw flange 3/4“ - 16UNF, zero point at 51 mm, for supporting at rod end *
Other mechanical versions on request

*) with internal thread M4x6 at rod end and additional length 7.5 mm

Important: Avoid equalizing currents in the cable shield caused by potential differences.
Only CANopen: Twisted pair cable (STP) is recommended.

Position marker

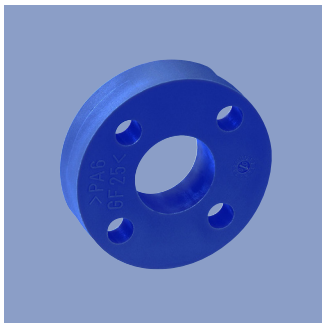

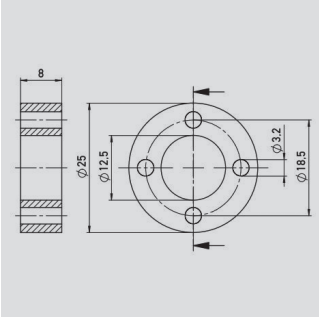

Ring Position Marker Z-TH1-P18, P/N 400005697

Material	PA6-GF25
Weight approx.	12 g
Operating temperature	-40 ... +100° C
Surface pressure max.	40 N/mm²
Fastening torque of mounting screws, max.	1 Nm

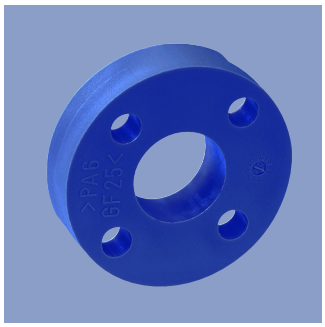

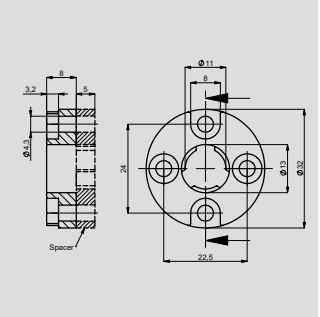

Ring Position Marker Z-TH1-P19, P/N 400005698
Ring Position Marker with Spacer Z-TH1-PD19, P/N 400107117

Material	PA6-GF Spacer POM-GF
Weight approx.	14 g
Operating temperature	-40 ... +100°C
Surface pressure max.	40 N/mm²
Fastening torque of mounting screws, max.	1 Nm

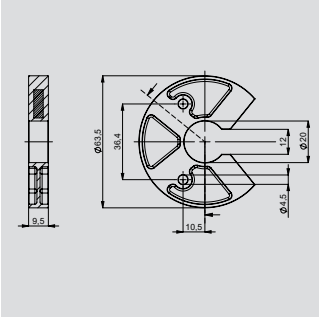

U-shaped Position Marker Z-TH1-P25, P/N 400105076

Material	PA6-GF
Weight approx.	23 g
Operating temperature	-40 ... +105°C
Surface pressure max.	40 N/mm²
Fastening torque of mounting screws, max.	1 Nm

Caution: For dimension of electrical zero point please follow the user manual!

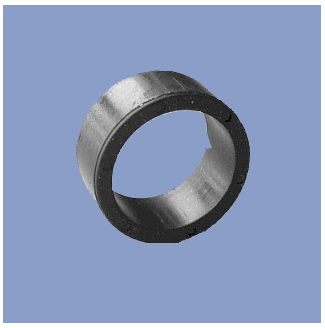

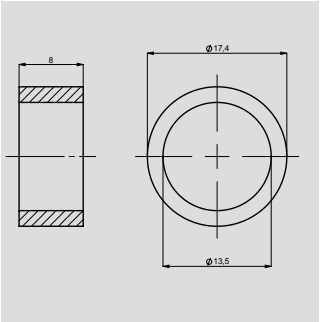

Ring Position Marker Z-TH1-P30, P/N 400106139

Material	NdFeB bonded (EP)
Weight approx.	5 g
Operating temperature	-40 ... +100°C
Surface pressure max.	10 N/mm²
Mounting via lock washer and lock ring	

Position marker
Fastening elements

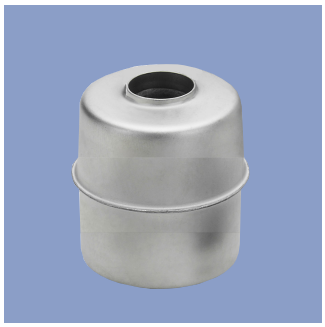

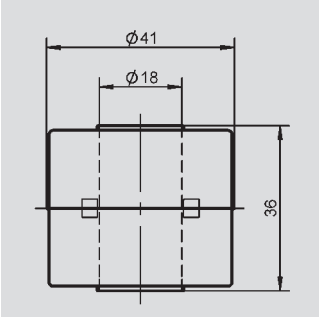

Cylinder - Floating Position Marker Z-TH1-P21, P/N 400056044

Material	1.4404
Weight approx.	20 g
Operating temperature	-40 ... +100°C
Compression strength, min.	< 8 bar
Density	740 kg/m³
Immersion depth in water	26,6 mm

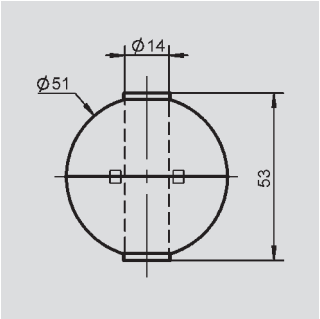

Bowl - Floating Position Marker Z-TH1-P22, P/N 400056045

Material	1.4571
Weight approx.	42 g
Operating temperature	-40 ... +100°C
Compression strength, min.	< 60 bar
Density	720 kg/m³
Immersion depth in water	36,7 mm

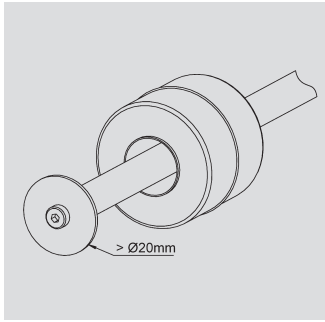

When using floating position markers, we recommend to secure the marker against loss with a washer at the rod end (s. drawing).
For this purpose, a sensor version with support at the rod end is required (s. ordering code).

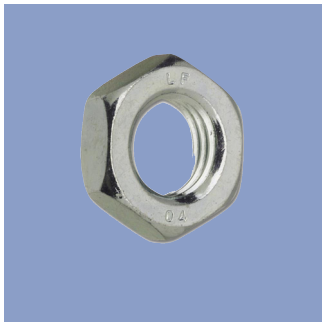

Mounting nut ISO 8675,
M18x1.5-A2
P/N 400056090
Z-TH1-M01

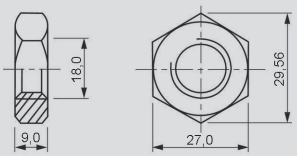

Mounting nut DIN 934,
3/4" - 16UNF-A2
P/N 400056091
Z-TH1-M02

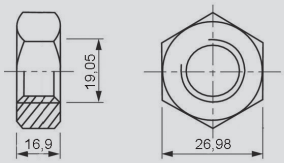

Connector System M12

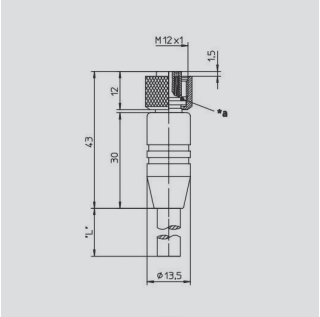

Pin assignment

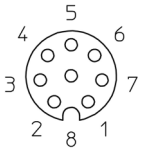

1 = white
2 = brown
3 = green
4 = yellow
5 = grey
6 = pink
7 = blue
8 = red

M12x1 Mating female connector, 8-pin, straight, A-coded, with molded cable, shielded, IP67, open ended

Connector housing	Plastic PA
Cable sheath	PUR; Ø = max. 8 mm -25 °C...+80 °C (moved) -50 °C...+80 °C (fixed)
Wires	PP, 0.25 mm²

Length	Type	P/N
2 m	EEM 33-86	400005629
5 m	EEM 33-90	400005635
10 m	EEM 33-92	400005637

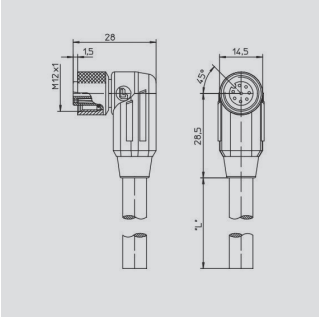

Pin assignment

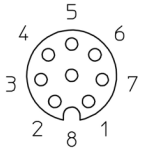

1 = white
2 = brown
3 = green
4 = yellow
5 = grey
6 = pink
7 = blue
8 = red

M12x1 Mating female connector, 8-pin, angled, A-coded, with molded cable, shielded, IP67, open ended

Connecto housing	Plastic PA
Cable sheath	PUR; Ø = max. 8 mm, -25 °C...+80 °C (moved) -50 °C...+80 °C (fixed)
Wires	PP, 0.25 mm²

Length	Type	P/N
2 m	EEM 33-87	400005630
5 m	EEM 33-91	400005636
10 m	EEM 33-93	400005638

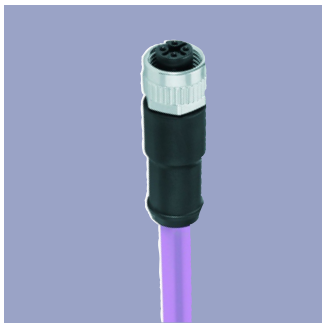

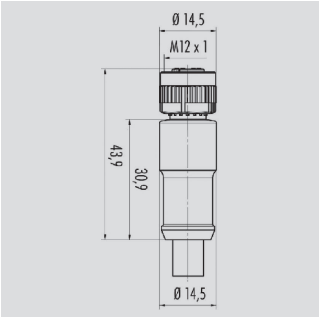

Pin assignment

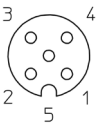

1 = Shield
2 = red (0.34 mm²)
3 = black (0.34 mm²)
4 = white (0.25 mm²)
5 = blue (0-25 mm²)

M12x1 Mating female connector, 5-pin, straight, A-coded, with molded cable, IP67, shielded, open ended, CAN-bus

Connector housing	PUR
Cable sheath	PUR Ø = max. 7.2 mm, -25 °C...+85 °C (moved)
Wires	PP 2x 0.25 mm² + 2 x 0.34 mm²

Length	Type	P/N
2 m	EEM 33-41	400056141
5 m	EEM 33-42	400056142
10 m	EEM 33-43	400056143

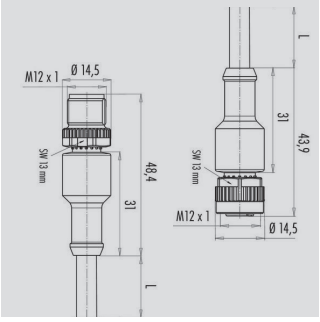

Pin assignment

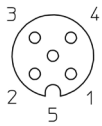

M12x1 Mating female connector, 5-pin, straight, A-coded, with molded cable, IP68, shielded, CAN-Bus

Connector housing	PUR
Cable sheath	PUR; Ø 7.2 mm -25 °C... +85 °C (fixed)

Length	Type	P/N
5 m	EEM 33-44	400056144

Connector System M12

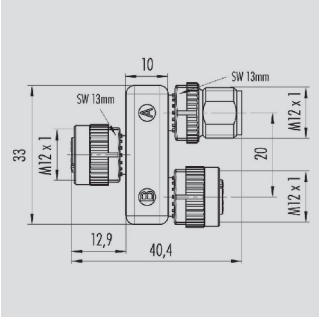

Pin assignment

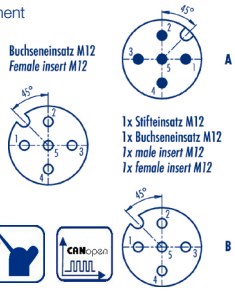

M12x1 splitter / T-connector, 5-pin, A-coded, IP68, 1:1 copnnection, female - male - female, CAN-bus

Connector housing	PUR
Temperature range	-25 °C... +85 °C

Type EEM 33-45, P/N 400056145

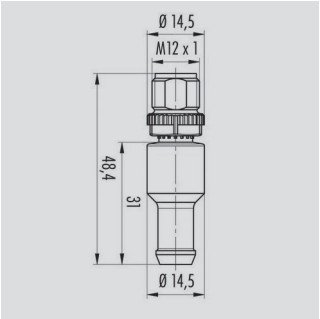

Pin assignment

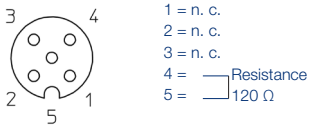

M12x1 terminating resistor, 5-pin, A-coded, IP67, 120 Ω resistance, CAN-bus

Connector housing	PUR
Temperature range	-25 °C... +85 °C

Type EEM 33-47, P/N 400056147

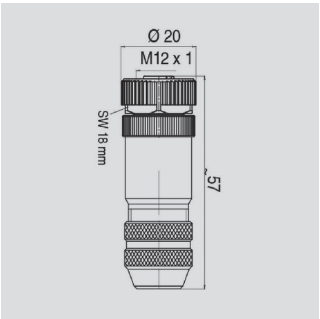

Pin assignment

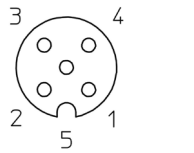

M12x1 Mating female connector 5-pin, straight, A-coded, with coupling nut, srew termination, IP67, shieldable, CAN-bus

Connector housing	Metall -40 °C...+85 °C
For wire gauge	6...8 mm, max. 0.75 mm²

Type EEM 33-73, P/N 400005645

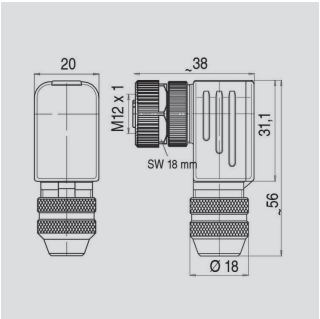

Pin assignment

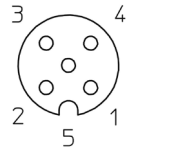

M12x1 Mating female connector, 5-pin, angled, A-coded, with coupling nut, screw termination, IP67, shieldable, CAN-Bus

Connector housing	Metall -40 °C...+85 °C
For wire gauge	6...8 mm, max. 0.75 mm²

Type EEM 33-75, P/N 400005646

It is possible to turn and fix the contact carrier in 90° positions.

Connector System M12

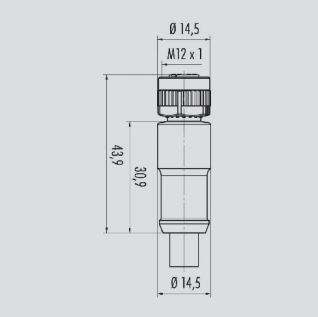

Pin assignment

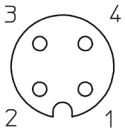

1 = brown
2 = white
3 = blue
4 = black

IP67 UL CANopen

M12x1 Mating female connector, 4-pin, straight, A-coded, with molded cable, not shielded, IP67, open ended

Connector housing	Plastic PA
Cable sheath	PUR; Ø = max. 6 mm, -40 °C...+85 °C (fixed)
Wires	PP, 0.34 mm²

Length	Type	P/N
2 m	EEM 33-35	400056135
5 m	EEM 33-36	400056136
10 m	EEM 33-37	400056137

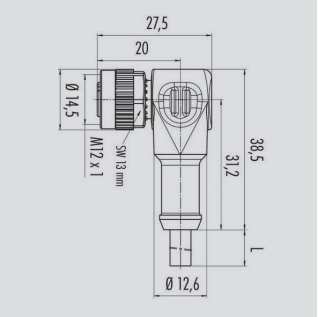

Pin assignment

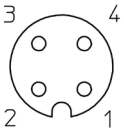

1 = brown
2 = white
3 = blue
4 = black

IP67 UL

M12x1 Mating female connector, 4-pin, angled, A-coded, with molded cable, not shielded, IP67, open ended

Connector housing	Plastic PA
Cable sheath	PUR; Ø = max. 6 mm, -40 °C...+85 °C (fixed)
Wires	PP, 0.34 mm²

Length	Type	P/N
2 m	EEM 33-38	400056138
5 m	EEM 33-39	400056139
10 m	EEM 33-40	400056140

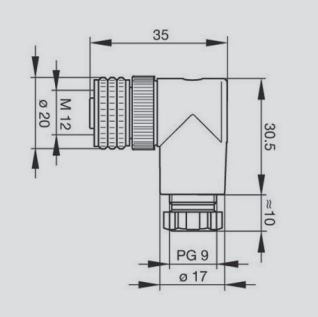

Pin assignment

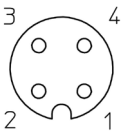

IP67

M12x1 Mating female connector, 4-pin, angled, A-coded, with coupling nut, screw termination, IP67, not shielded

Connector housing	Plastic PBT -25 °C...+90 °C
For wire gauge	6...8 mm, max. 0.75 mm²

Type EEM 33-89, P/N 400005634

Connector System M16

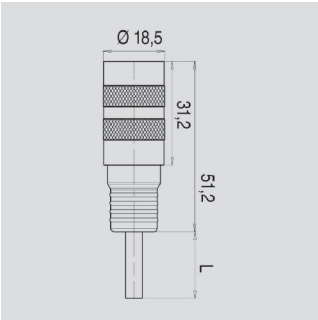

Pin assignment

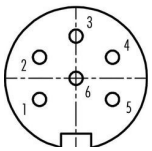

1 = red
2 = black
3 = yellow
4 = blue
5 = white
6 = green

IP67

M16x0.75 Mating female connector, 6-pin, straight, with molded cable, 2 m length, shielded, IP67, open ended

Connector housing	PUR
Cable sheath	PUR; Ø max. 6 mm, -5...+70 °C (moved) -20...+70 °C (fixed)
Wires	PVC, 6 x 0.25 mm²
Type EEM 33-26, P/N 400056126	

This coupling can can be used in combination with 5-pin M16 connectors. Than „pin 6/ green“ is open.

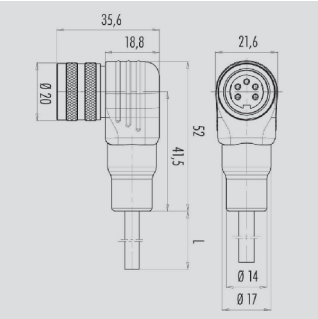

Pin assignment

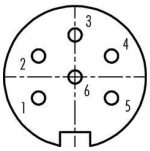

1 = red
2 = black
3 = yellow
4 = blue
5 = white
6 = green

IP67

M16x0.75 Mating female connector, 6-pin, angled, with molded cable, 2 m length, shielded, IP67, open ended

Connector housing	PUR
Cable sheath	PUR; Ø max. 6 mm, -5...+70 °C (moved) -20...+70 °C (fixed)
Wires	PVC, 6 x 0.25 mm²
Type EEM 33-27, P/N 400056127	

This coupling can can be used in combination with 5-pin M16 connectors. Than „pin 6 / green“ is open.

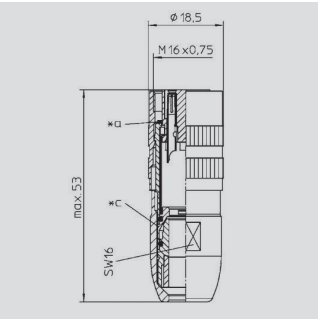

Pin assignment

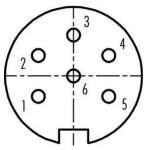

IP68

M16x0,75 Mating female connector, 6-pin, straight, with coupling nut, solder terminal, IP68, shielded

Connector housing	CuZn (Brass, nickel plated) -40 °C... +85 °C
For wire gauge	4...8 mm, max. 0.75 mm²
Type EEM 33-82, P/N 400005639	

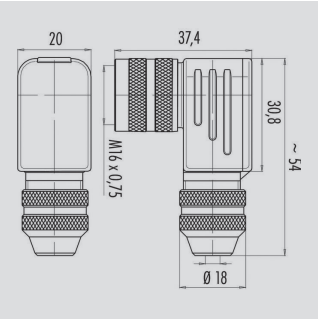

Pin assignment

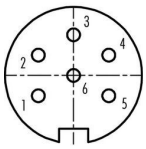

IP67 UL

M16x0,75 Mating female connector, 6-pin, angled, with couplingnut, solder terminal, IP67, shielded

Connector housing	CuZn (Brass , nickel plated) -40 °C... +95 °C
For wire gauge	6...8 mm, PG 9 max. 0.75 mm²
Type EEM 33-94, P/N 400005648	

novotechnik
Siedle Group

Novotechnik
Messwertaufnehmer OHG

Postfach 4220
73745 Ostfildern (Ruit)
Horbstraße 12
73760 Ostfildern (Ruit)

Telefon +49 711 4489-0
Telefax +49 711 4489-118
info@novotechnik.de
www.novotechnik.de

© 03/2022
Printed in Germany.

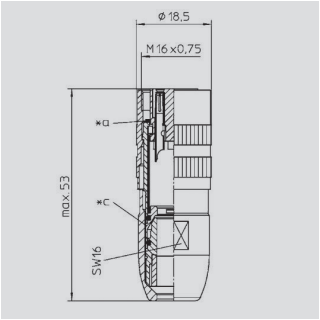

Pin assignment

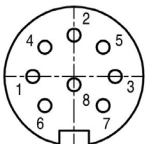

IP68

M16x0.75 Mating female connector, 8-pin, straight, with coupling nut, solder terminal, IP68, shielded

Connector housing	CuZn (Brass, nickel plated) -40 °C... +85 °C
For wire gauge	4...8 mm, max. 0.75 mm²
Type EEM 33-84, P/N 400005627	

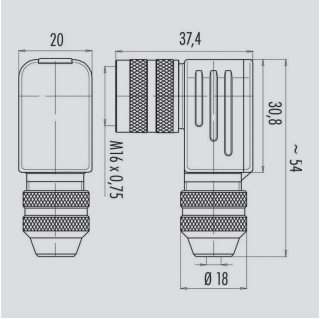

Pin assignment

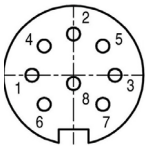

IP67 UL

M16x0.75 Mating female connector, 8-pin, angled, with coupling nut, solder terminal, IP67, shielded

Connector housing	CuZn (Brass, nickel plated) -40 °C... +95 °C
For wire gauge	6...8 mm, PG 9 max. 0.75 mm²
Type EEM 33-85, P/N 400005628	

IP67 Protection class IP67 to DIN EN 60529

IP68 Protection class IP68 to DIN EN 60529

CAN-bus

Very good Electromagnetic Compatibility (EMC) and shield systems

Very good resistance to oils, coolants and lubricants

UL - approved

Suited for applications in dragchains

Note: The protection class is valid only in locked position with its plugs.
The application of these products in harsh environments must be checked in particular cases.

The specifications contained in our datasheets are intended solely for informational purposes. The documented specification values are based on ideal operational and environmental conditions and can vary significantly depending on the actual customer application. Using our products at or close to one or more of the specified performance ranges can lead to limitations regarding other performance parameters. It is therefore necessary that the end user verifies relevant performance parameters in the intended application. We reserve the right to change product specifications without notice.